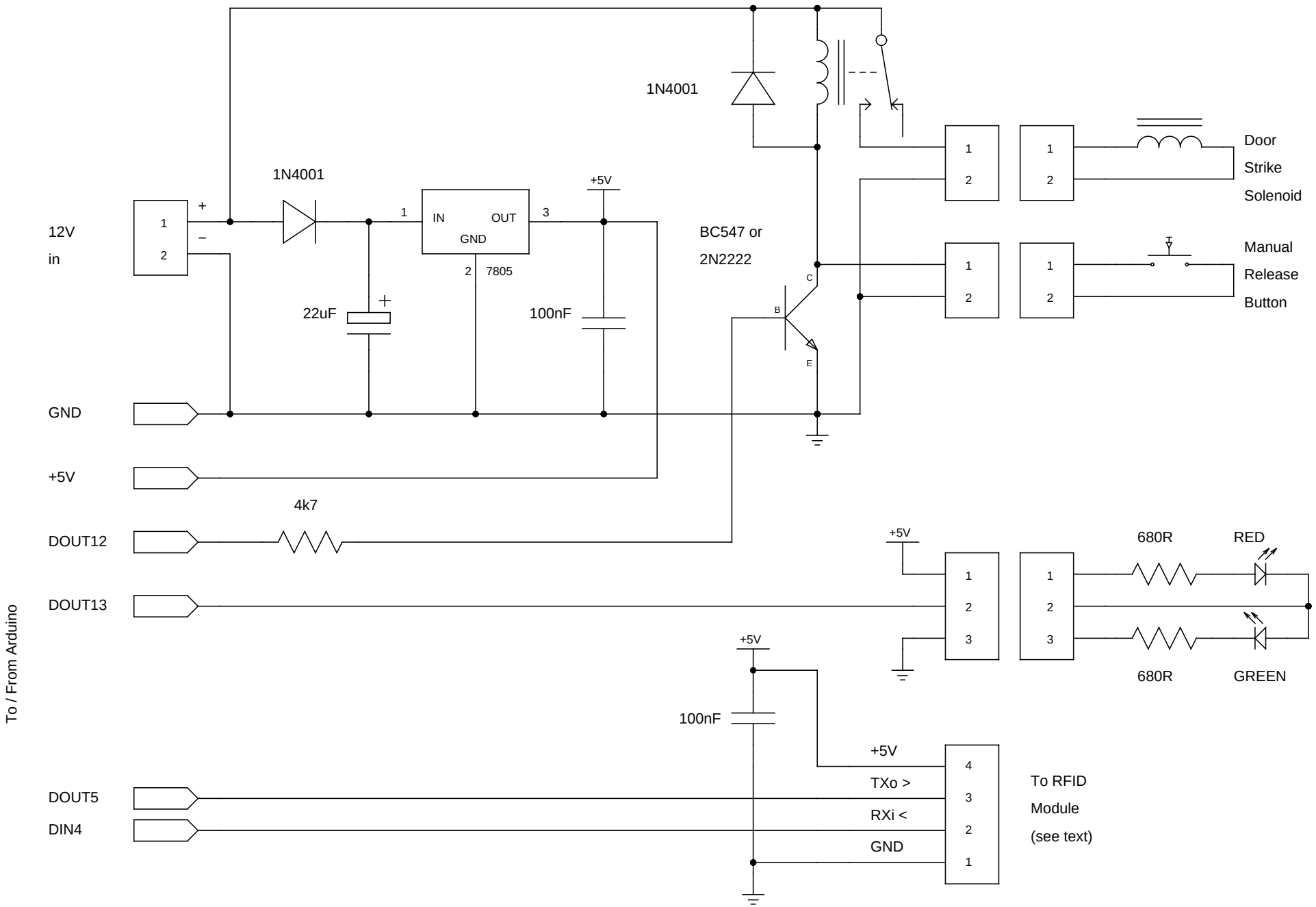
1N4001
1N4001
12V
in
+
–
1
2
IN
OUT
GND
7805
1
2
3
+5V
22uF
100nF
BC547 or
2N2222
C
B
E
Door
Strike
Solenoid
Manual
Release
Button
GND
+5V
4k7
DOUT12
DOUT13
+5V
680R
RED
680R
GREEN
To / From Arduino
100nF
+5V
+5V
TXo >
RXi <
GND
DOUT5
DIN4
To RFID
Module
(see text)